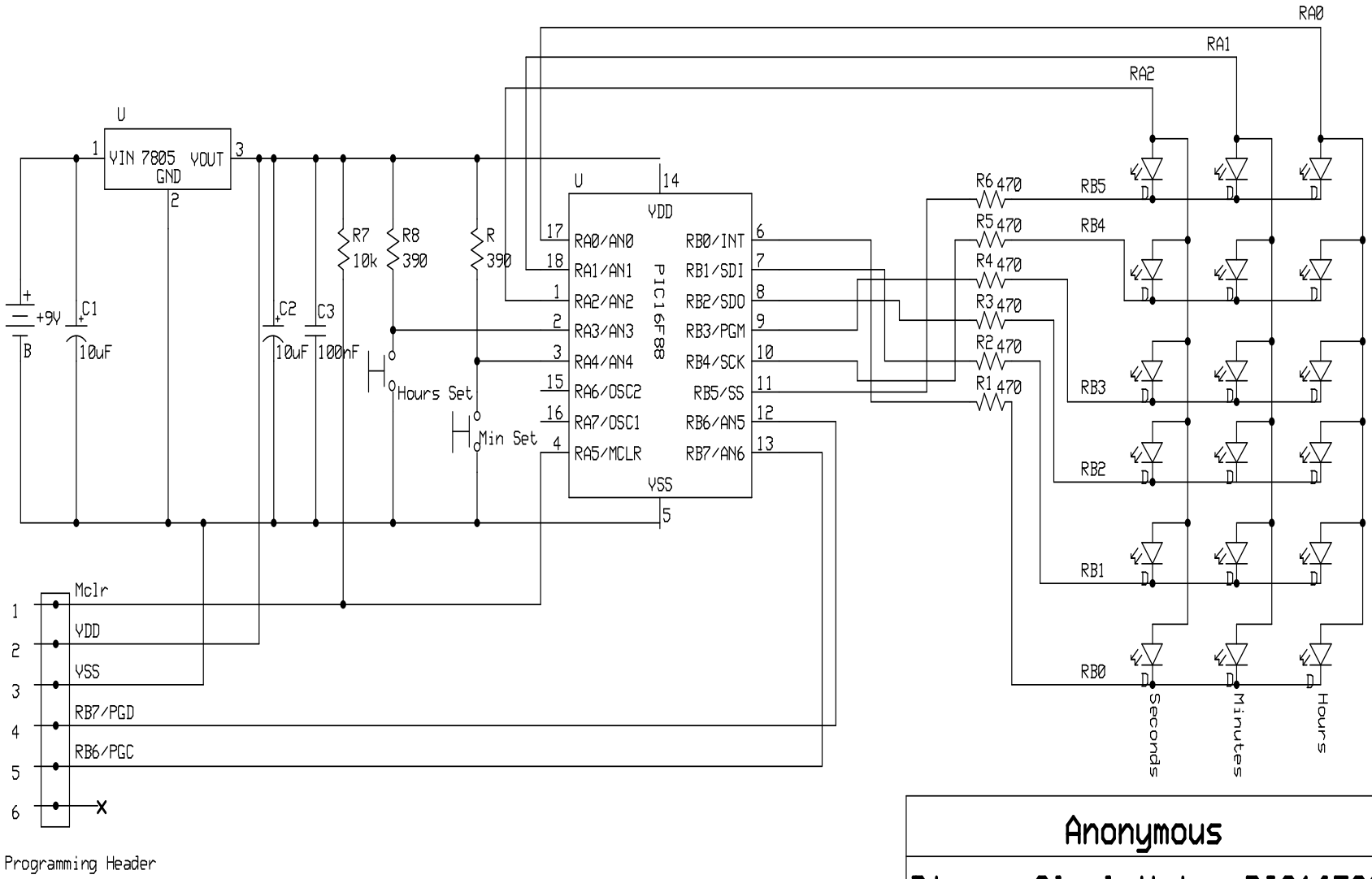

Anonymous		
Binary Clock Using PIC16F88		
Carl Mitchell	Rev 2.0 27/10/2012	Page # or name